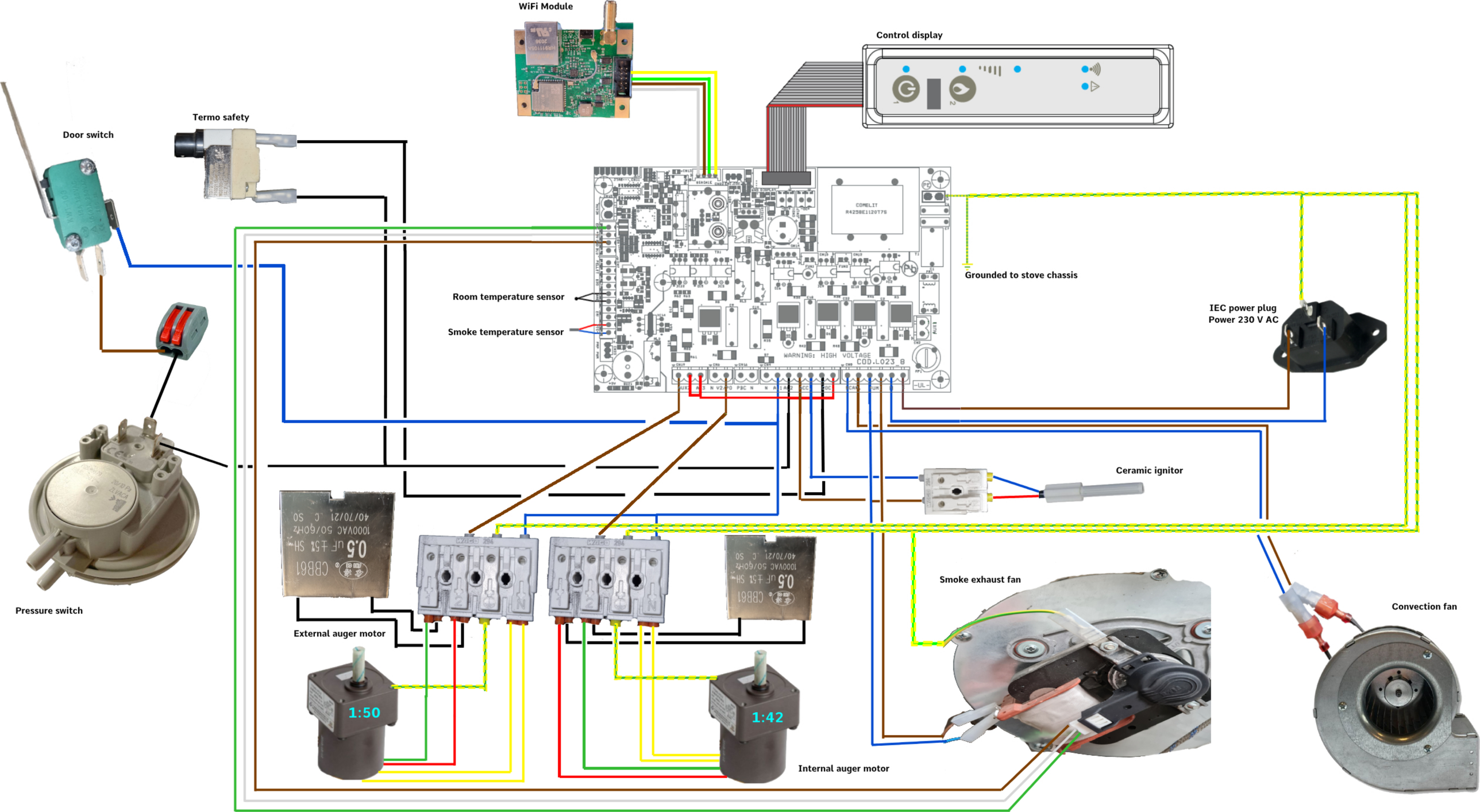
WiFi Module
Control display
Door switch
Termo safety
Room temperature sensor
Smoke temperature sensor
Grounded to stove chassis
IEC power plug
Power 230 V AC
Ceramic ignitor
Pressure switch
External auger motor
Smoke exhaust fan
Convection fan
Internal auger motor
1:50
1:42
WARNING: HIGH VOLTAGE
COD.L023_8